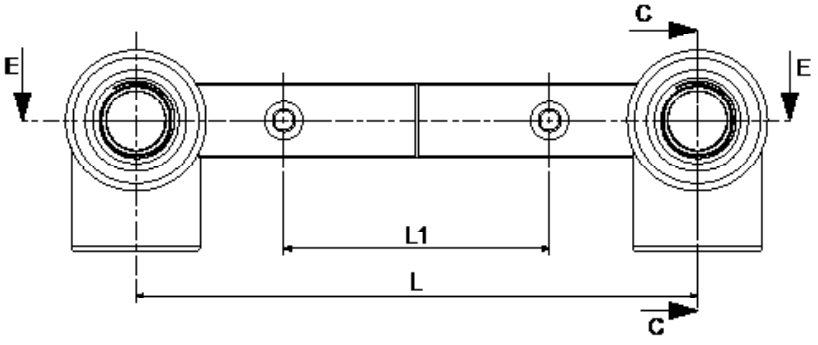

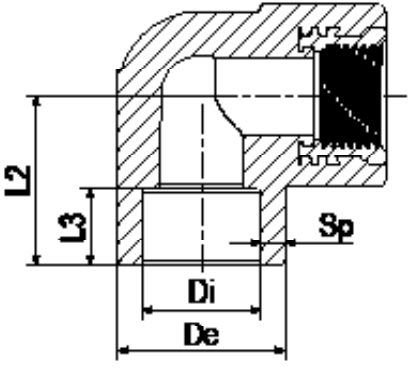

Articolo *Code*	SDR	DN/OD	De	Di	Di1	L	L1	L2	L3	L4	L5	Sp	Peso *Wt.*
			mm	mm		mm	mm	mm	mm	mm	mm	mm	gr
67190	5	F½”x25	34,5	25,0	F½”	150,0	71,0	35,0	16,0	38,0	55,5	4,75	176,0